Talis S
Single lever kitchen mixer with pull-out spray
Surfaces: **chrome** Art. no. : **32841000**

Description

product features

- swivel spout 150°
- normal and spray jet
- lockable shower spray, spray return automatically through handle closing
- operating pressure: min. 1 bar/max. 10 bar
- ceramic cartridge
- connection type: ⅜" hose connections
- QuickClean technology for easy limescale removal

Article Details

Price incl. VAT*	£ 331.00

Technology

Product image
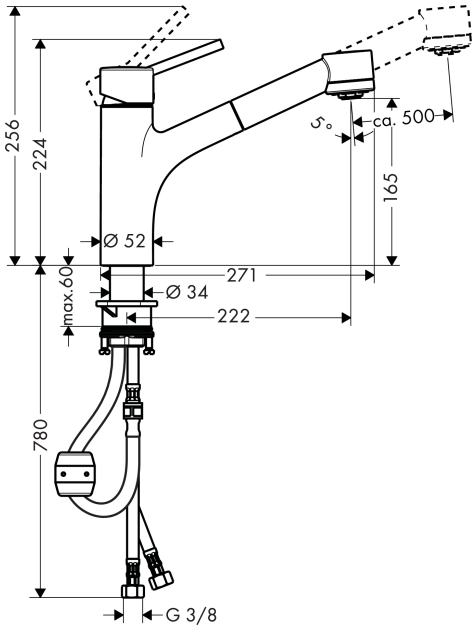
Scale drawing