Focus
3-hole basin mixer 100 with pop-up waste set
Surfaces: **chrome** Article Number: **31937000**

Description

product features

- ComfortZone 100
- flow rate: 5 l/min
- pop-up waste set
- suitable for continuous flow water heaters

Technology

Product image
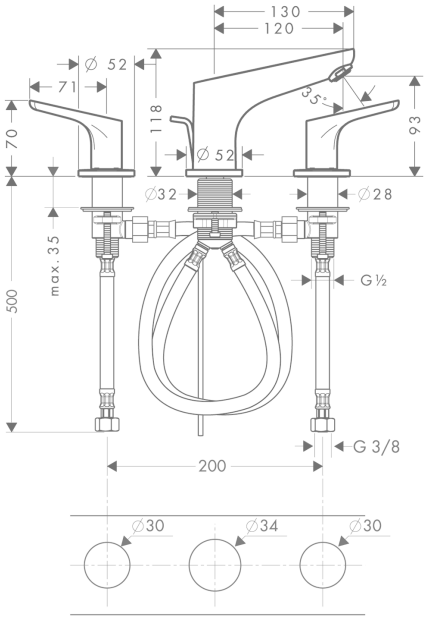
Scale drawing