PuraVida
Single lever basin mixer 200 with push-open waste set
Surfaces: **chrome** Article Number: **15081000**

Description

product features

- ComfortZone 200
- projection 132 mm
- laminar spray
- flow rate: 5 l/min
- adjustable spray former
- push-open waste set (operation via pressure plug, for basins with overflow)
- suitable for continuous flow water heaters

Technology

Product image
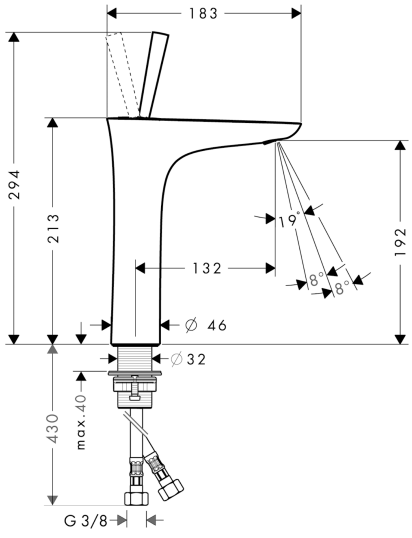
Scale drawing