Talis S²
Single lever kitchen mixer
Surfaces: **chrome** Art. no. : **14870000**

Description

product features

- swivel spout can be adjusted in 3 steps 110°, 150° or 360°
- normal spray
- operating pressure: min. 1 bar/max. 10 bar
- ceramic cartridge
- connection type: ⅜" hose connections
- QuickClean technology for easy limescale removal
- please specify when ordering if required for low pressure

Article Details

Price incl. VAT* £ 291.00

Technology

Product image
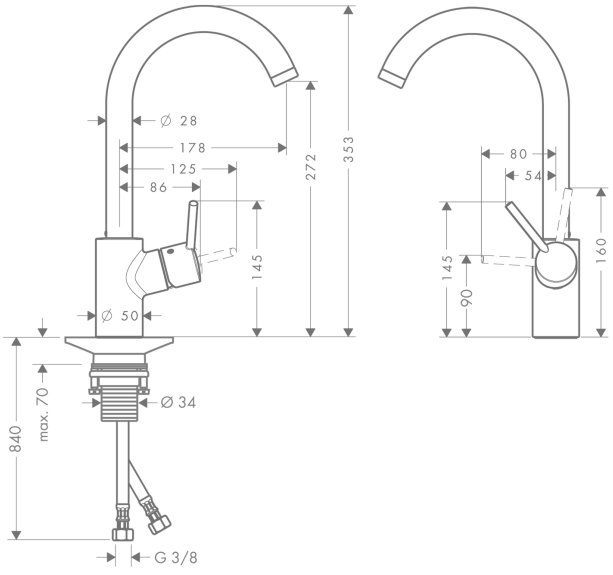
Scale drawing